ASTROLINE

Masking Station

ASMS2

OPERATING INSTRUCTIONS PARTS LIST WARRANTY

⚠ WARNING ⚠

For Your Safety & to Prevent Injury

1. Always wear protective equipment and eyewear.
2. Cutting blades are extremely sharp, use extreme caution when adding, removing or dispensing paper and tape.
3. Do not overload to avoid tipping of the unit.

OWNER'S RESPONSIBILITY

The owner and/or operator shall have an understanding of these operating instructions and warnings before operating the product. Warning information shall be emphasized and understood. If the operator is not fluent in English, the instructions and warnings shall be read to and discussed with the operator in operator's native language by the purchaser/ owner, making sure that the operator comprehends its contents.

ASSEMBLY INSTRUCTIONS

1. Place A together with B (Main Frame) and attach.
2. Attach ASMS2-03 (Leg Support Assembly) to ASMS2-02 (Main Frame Assembly).
3. Attach ASMS2-05 (22" Support Assembly) to ASMS2-01, start at the lowest level.
4. Attach ASMS2-05 (22" Support Assembly) to ASMS2-01.
5. Attach ASMS2-06 (16" Support Assembly) to ASMS2-01.
6. Attach ASMS2-06 (16" Support Assembly) to ASMS2-01.
7. Place ASMS2-04 (Wheel Assembly) on both sides of ASMS2-02 (place washer, wheel,washer and cotter pin, then spread the pin) and attach.
8. Attach ASMS2-07 (Tape Reel Assembly) to ASMS2-01, use wing nuts.
9. Attach ASMS2-08 (22" Cutting Blade Assembly) to ASMS2-05 (22" Support Assembly), starting at the bottom. Attach spring to cutting bar.
10. Attach ASMS2-08(22" Cutting Blade Assembly) to ASMS2-05 (22" Support Assembly). Attach spring to cutting bar.
11. Attach ASMS2-09 (16" Cutting Blade Assembly) to ASMS2-06 (16" Support Assembly). Attach spring to cutting bar.
12. Attach ASMS2-09 (16" Cutting Blade Assembly) to ASMS2-06 (16" Support Assembly). Attach spring to cutting bar.
13. Place ASMS2-10 (Paper Roller Assembly) on ASMS2-05 (place slide ring, spring, washer along each rod then attach the clip to the end of the support).
14. Place ASMS2-10 (Paper Roller Assembly) on ASMS2-05 (22" Support Assembly).
15. Place ASMS2-10 (Paper Roller Assembly) on ASMS2-06 (16" Support Assembly).
16. Place ASMS2-10 (Paper Roller Assembly) on ASMS2-06 (16" Support Assembly).
17. Place plastic caps on each support and leg caps on ends of legs.

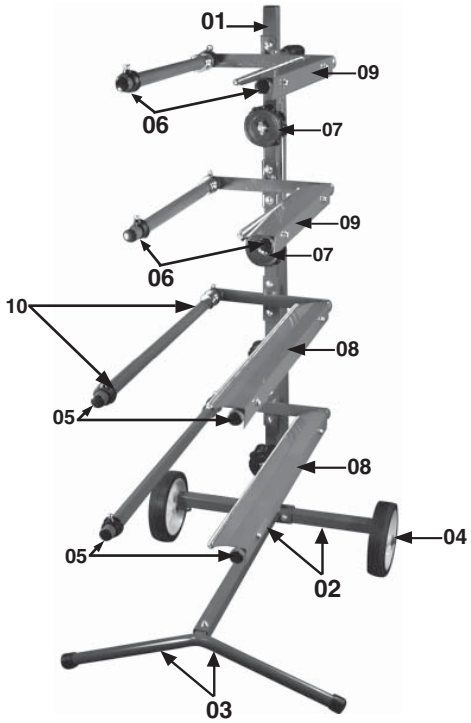

Patent # 325,919

ASSEMBLY INSTRUCTIONS

PARTS #	DESCRIPTION	QTY
ASMS2-01	MAIN FRAME	1
ASMS2-02	MAIN FRAME ASSEMBLY	1
ASMS2-03	LEG SUPPORT	1
ASMS2-04	WHEEL ASSEMBLY	2
ASMS2-05	22" SUPPORT ASSEMBLY	2
ASMS2-06	16" SUPPORT ASSEMBLY	2
ASMS2-07	TAPE REEL ASSEMBLY	4
ASMS2-08	22" CUTTING BLADE ASSEMBLY	2
ASMS2-09	16" CUTTING BLADE ASSEMBLY	2
ASMS2-10	PAPER ROLLER ASSEMBLY (SLIDE RINGS, SPRINGS & WASHERS)	4

ASTRO 1 YEAR LIMITED WARRANTY

The manufacturer warrants this equipment to the original user against defective material or workmanship for a period of 1 year from the date of purchase on repair parts and labor. The manufacturer's responsibility under this warranty is limited to the repair or replacement of defective part or parts.

The manufacturer reserves the right to determine whether the part or parts failed because of defective material, workmanship or other causes. Failure caused by accident, alteration, misuse or improper packaging of returned units is not covered by this warranty.

All warranty repairs must be done by Astro Tool Service Representative or Astro Factory. Any repair to the equipment other than by these authorized facilities voids this warranty. The rights under this warranty are limited to the original user and may not be transferred to subsequent owners.

The warranty is in lieu of all other warranties, expressed or implied, including warranties of merchantability and fitness for a particular purpose.

WARNING: Do not, under any circumstances, attempt to repair or make any adjustments on your tool, as this will VOID your warranty. These attempts on the part of the user are ALWAYS evident to the service center.

Astro Pneumatic Tool Company
(800) 221-9705

MADE IN CHINA

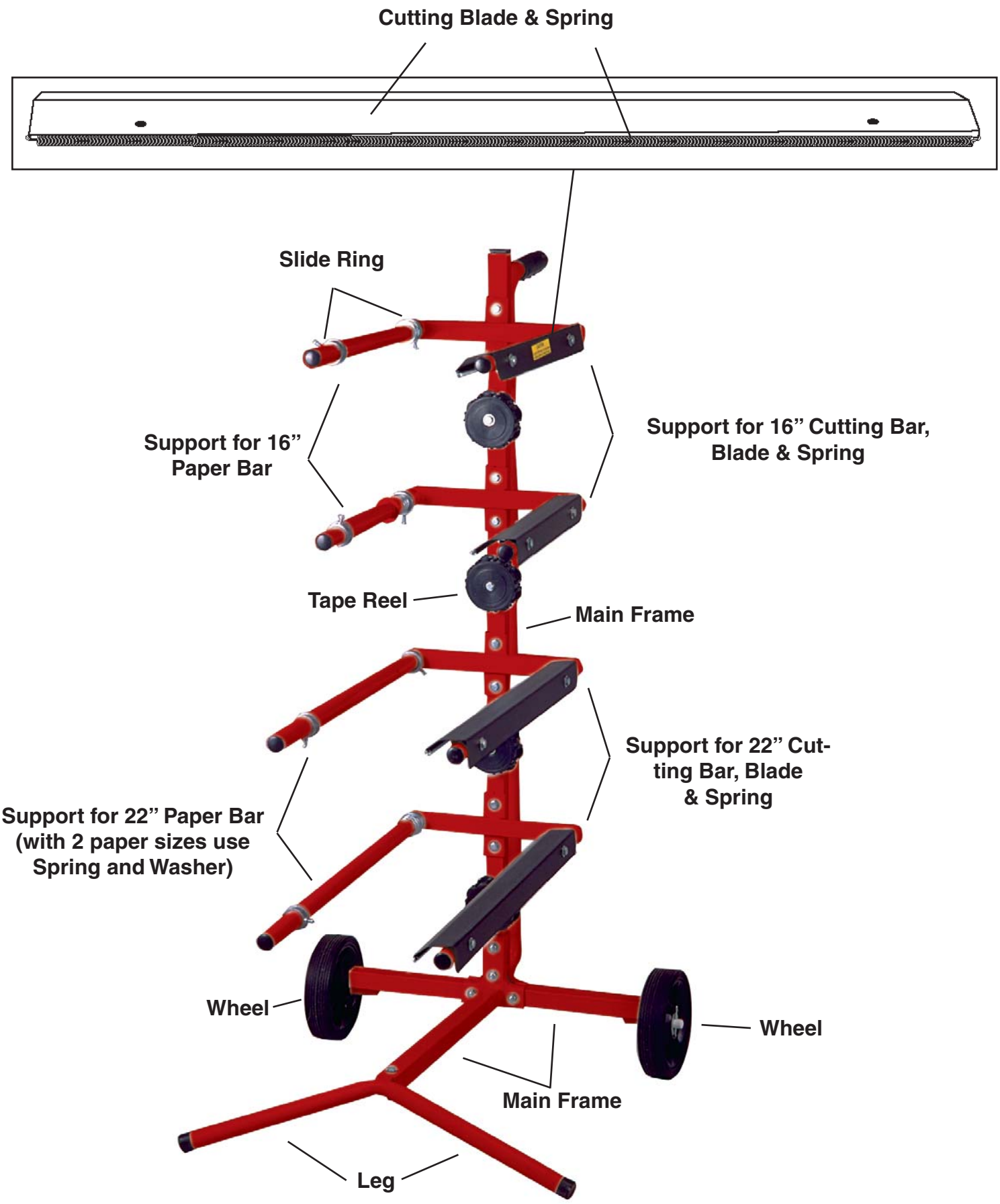
Cutting Blade & Spring
Slide Ring
Support for 16” Paper Bar
Support for 16” Cutting Bar, Blade & Spring
Tape Reel
Main Frame
Support for 22” Cutting Bar, Blade & Spring
Support for 22” Paper Bar (with 2 paper sizes use Spring and Washer)
Wheel
Wheel
Main Frame
Leg